TECHNICAL INFORMATION

Todd Morgue Table Receptor 5000

DST 216

The Todd Morgue Table Receptor 5000 is a rinsing rim direct drain system for waste removal at the foot end of the table.

SPECIAL FEATURES

- ultra-space saving, compact design fits easily into both new and retrofit projects
- continuous incoming water supply keeps drain line clear and reduces airborne particulates
- built-in pressure reducing device helps maintain recommended psi
- pressure reducing device is easily removable if desired
- compact, easy to clean, durable stainless steel body
- cabinet mounted for easy floor cleaning
- removable 3" round strainer sleeve with easy lift handle captures cotton and other large waste

SPECIFICATIONS

- manufactured from 16-gauge stainless steel
- weight: 10 lb.
- recommended mounting height:
  26" above floor to top of the unit

DIMENSIONS

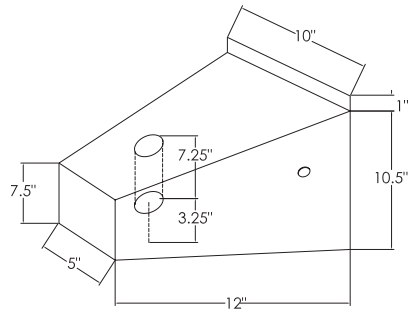

©2007 DST, Ltd. Rev. 7-07

DUNCAN STUART TODD
THE PREPARATION ROOM SPECIALISTS

775.832.6898 fax 775.832.6895
info@dstlimited.com www.dstlimited.com

TECHNICAL INFORMATION

Todd Morgue Table Receptor 5000

INSTALLATION

- unit is pre-plumbed and ready to mount with 4 fasteners
- mount unit on a 32" wide fixed panel
- one ½" flexible cold water connection from angle stop
- one 2" waste line with p-trap connected directly to facility waste line
- supplied with mounting hardware, template and installation instructions
- install in accordance with all applicable codes
- clean out all plumbing lines prior to start-up

AUXILIARY REQUIREMENTS FOR CODE COMPLIANCE

- reduced pressure backflow preventers required on cold water line
- mark piping to Todd MTR 5000 non-potable per plumbing code requirements

SCHEMATIC RISER

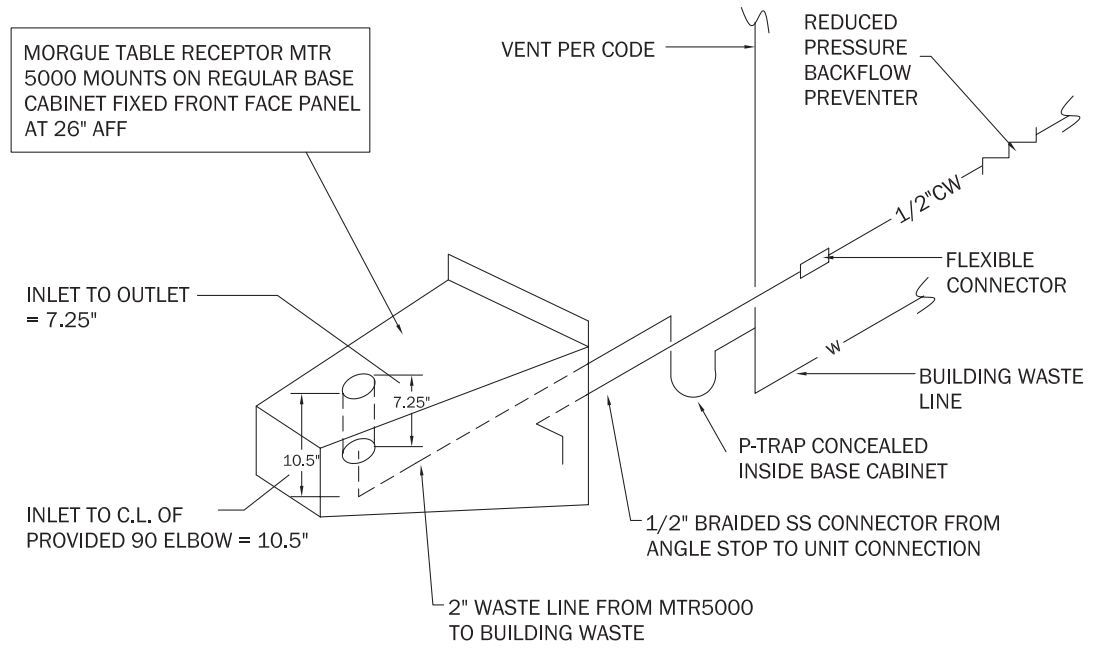

©2007 DST, Ltd. Rev. 7-07

DUNCAN STUART TODD
THE PREPARATION ROOM SPECIALISTS

775.832.6898 fax 775.832.6895
info@dstlimited.com www.dstlimited.com